IXYS

Standard Power MOSFET

P-Channel Enhancement Mode
Avalanche Rated

IXTH/IXTT 10P50
IXTH/IXTT 11P50

V_{DSS}	I_{D25}	$R_{DS(on)}$
-500 V	-10 A	0.90 Ω
-500 V	-11 A	0.75 Ω

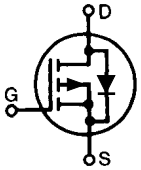

Symbol	Test Conditions		Maximum Ratings	
V_{DSS}	T_J = 25°C to 150°C		-500	V
V_{DGR}	T_J = 25°C to 150°C; R_{GS} = 1 MΩ		-500	V
V_{GS}	Continuous		±20	V
V_{GSM}	Transient		±30	V
I_{D25}	T_C = 25°C	10P50	-10	A
		11P50	-11	A
I_{DM}	T_C = 25°C, pulse width limited by T_J	10P50	-40	A
		11P50	-44	A
I_{AR}	T_C = 25°C	10P50	-10	A
		11P50	-11	A
E_{AR}	T_C = 25°C		30	mJ
P_D	T_C = 25°C		300	W
T_J			-55 ... +150	°C
T_{JM}			150	°C
T_{stg}			-55 ... +150	°C
T_L	Maximum lead temperature for soldering 1.6 mm (0.062 in.) from case for 10 s		300	°C
M_d	Mounting torque (TO-247)		1.13/10	Nm/lb.in.
Weight	TO-247 AD		6	g
	TO-268		4	g

Symbol	Test Conditions		Characteristic Values (T_J = 25°C, unless otherwise specified) min.	typ.	max.	
V_{DSS}	V_{GS} = 0 V, I_D = -250 μA		-500			V
	BV_{DSS} Temperature Coefficient			0.054		%/K
$V_{GS(th)}$	V_{DS} = V_{GS}, I_D = -250 μA		-3.0		-5.0	V
	$V_{GS(th)}$ Temperature Coefficient			-0.122		%/K
I_{GSS}	V_{GS} = ±20 V_{DC}, V_{DS} = 0				±100	nA
I_{DSS}	V_{DS} = 0.8 • V_{DSS}	T_J = 25°C			-200	μA
	V_{GS} = 0 V	T_J = 125°C			-1	mA
$R_{DS(on)}$	V_{GS} = -10 V, I_D = 0.5 • I_{D25}	10P50			0.90	Ω
		11P50			0.75	Ω
	$R_{DS(on)}$ Temperature Coefficient				0.6	%/K

TO-247 AD (IXTH)

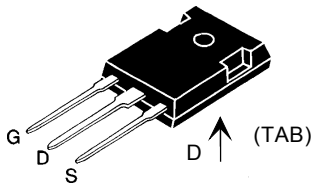

TO-268 (IXTT) Case Style

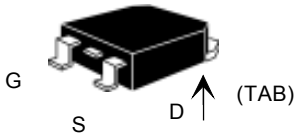

G = Gate D = Drain
S = Source TAB = Drain

Features

- International standard packages
- Low $R_{DS\ (on)}$ HDMOS™ process
- Rugged polysilicon gate cell structure
- Unclamped Inductive Switching (UIS) rated
- Low package inductance
  - easy to drive and to protect

Advantages

- Easy to mount
- Space savings
- High power density

© 2002 IXYS All rights reserved

Symbol	Test Conditions	Characteristic Values (T_J = 25°C, unless otherwise specified) min.	typ.	max.	
g_{fs}	V_{DS} = -10 V; $I_D = I_{D25}$, pulse test	5	9		S
C_{iss}	V_{GS} = 0 V, V_{DS} = -25 V, f = 1 MHz		4700		pF
C_{oss}			430		pF
C_{rss}			135		pF
$t_{d(on)}$	V_{GS} = -10 V, V_{DS} = 0.5 V_{DSS}, I_D = 0.5 I_{D25}; R_G = 4.7 Ω (External)		33		ns
t_r			27		ns
$t_{d(off)}$			35		ns
t_f			35		ns
$Q_{g(on)}$	V_{GS} = -10 V, V_{DS} = 0.5 V_{DSS}, I_D = 0.5 I_{D25}		160		nC
Q_{gs}			46		nC
Q_{gd}			92		nC
R_{thJC}				0.42	K/W
R_{thCS}	(TO-247)		0.25		K/W

Source-Drain Diode — Characteristic Values (T_J = 25°C, unless otherwise specified)

Symbol	Test Conditions		min.	typ.	max.	
I_S	V_{GS} = 0	10P50			-10	A
		11P50			-11	A
I_{SM}	Repetitive; pulse width limited by T_{JM}	10P50			-40	A
		11P50			-44	A
V_{SD}	$I_F = I_S$, V_{GS} = 0 V, Pulse test, t ≤ 300 μs, duty cycle d ≤ 2 %				-3	V
t_{rr}	$I_F = I_S$, di/dt = 100 A/μs			500		ns

TO-247 AD Outline

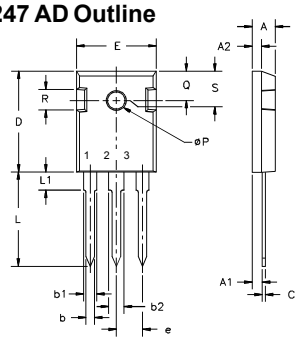

Terminals: 1 - Gate 2 - Drain
3 - Source Tab - Drain

Dim.	Millimeter Min.	Max.	Inches Min.	Max.
A	4.7	5.3	.185	.209
A_1	2.2	2.54	.087	.102
A_2	2.2	2.6	.059	.098
b	1.0	1.4	.040	.055
b_1	1.65	2.13	.065	.084
b_2	2.87	3.12	.113	.123
C	.4	.8	.016	.031
D	20.80	21.46	.819	.845
E	15.75	16.26	.610	.640
e	5.20	5.72	0.205	0.225
L	19.81	20.32	.780	.800
L1		4.50		.177
∅P	3.55	3.65	.140	.144
Q	5.89	6.40	0.232	0.252
R	4.32	5.49	.170	.216
S	6.15 BSC		242 BSC	

TO-268 Outline

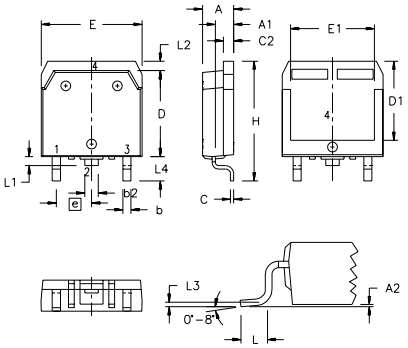

Terminals: 1 - Gate 2 - Drain
3 - Source Tab - Drain

SYM	INCHES MIN	MAX	MILLIMETERS MIN	MAX
A	.193	.201	4.90	5.10
A1	.106	.114	2.70	2.90
A2	.001	.010	0.02	0.25
b	.045	.057	1.15	1.45
b2	.075	.083	1.90	2.10
C	.016	.026	0.40	0.65
C2	.057	.063	1.45	1.60
D	.543	.551	13.80	14.00
D1	.488	.500	12.40	12.70
E	.624	.632	15.85	16.05
E1	.524	.535	13.30	13.60
e	.215 BSC		5.45 BSC	
H	.736	.752	18.70	19.10
L	.094	.106	2.40	2.70
L1	.047	.055	1.20	1.40
L2	.039	.045	1.00	1.15
L3	.010 BSC		0.25 BSC	
L4	.150	.161	3.80	4.10

IXYS reserves the right to change limits, test conditions, and dimensions.

IXYS MOSFETs and IGBTs are covered by one or more of the following U.S. patents: 4,835,592 4,881,106 5,017,508 5,049,961 5,187,117 5,486,715 6,306,728B1 4,850,072 4,931,844 5,034,796 5,063,307 5,237,481 5,381,025